8 foot rectangular Cafe Conference Table

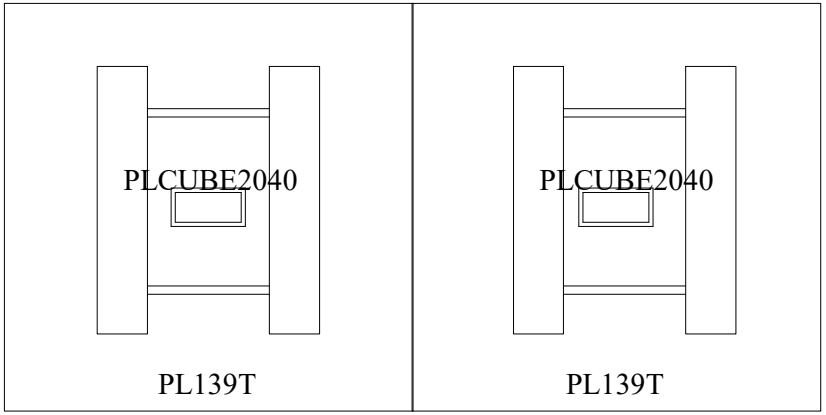

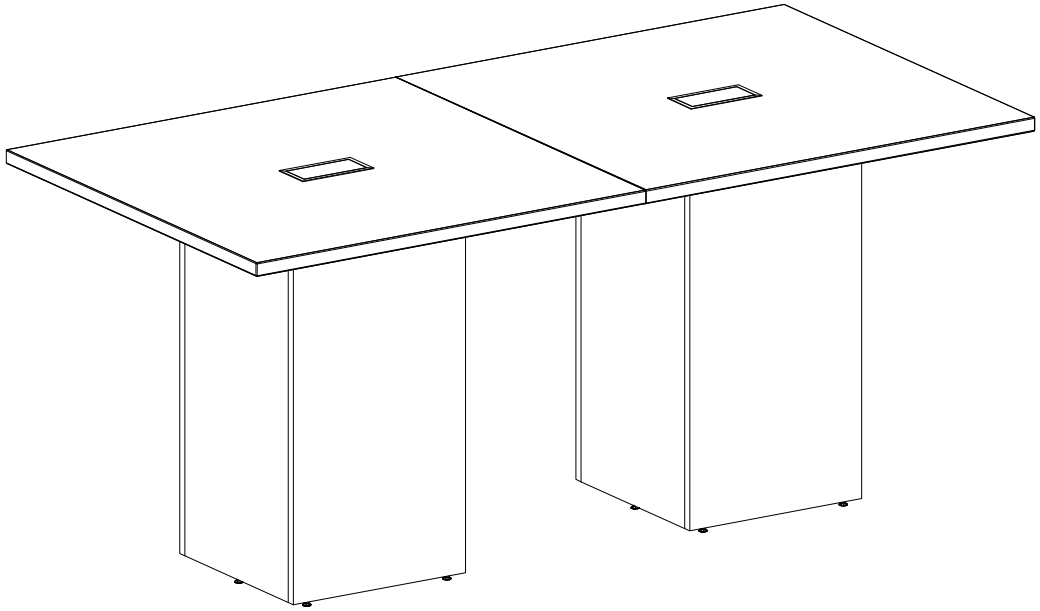

Count	Mfg	Part #	Description	Sell	Extended Sell	Finish	Frame Design	Other	Building	Floor	Department
2	OS3	PL139T	Square Laminate Conference Top 48"W X 48"D								
2	OS3	PLCUBE2040	20"D X 20"W x 40"H Cube Base								
			Total:								