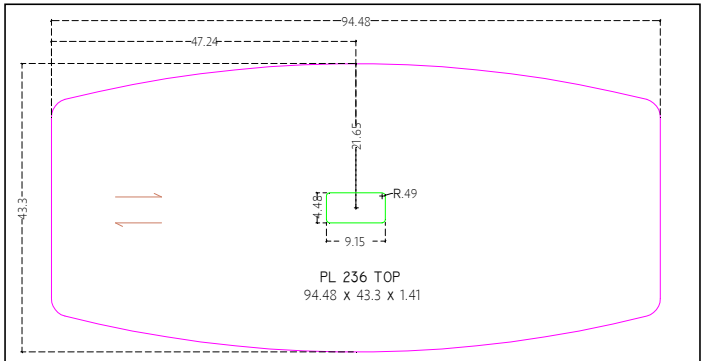

PL 236 TOP
94.48 x 43.3 x 1.41

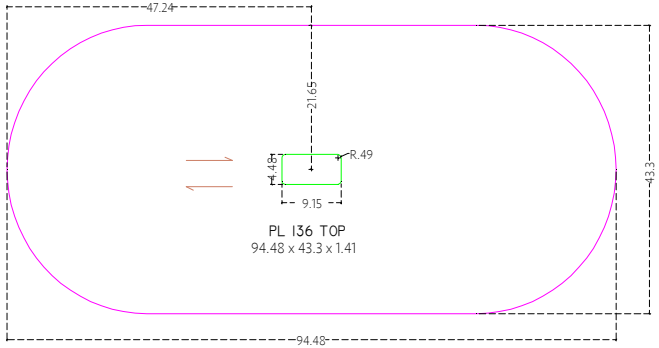

PL 136 TOP
94.48 x 43.3 x 1.41

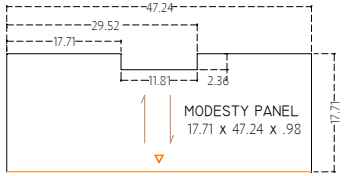

MODESTY PANEL
17.71 x 47.24 x .98

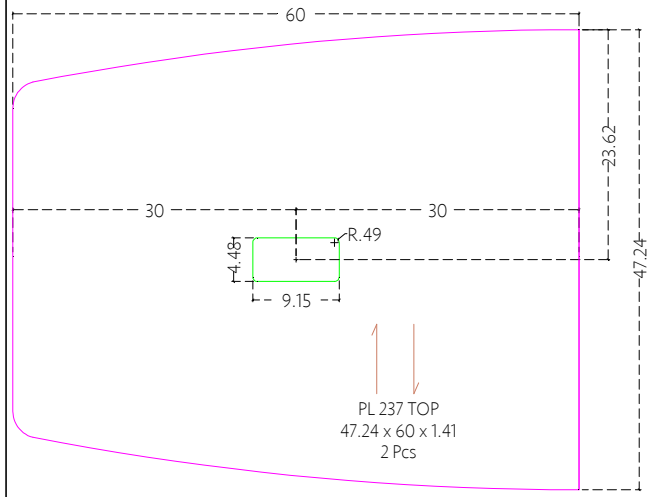

PL 237 TOP
47.24 x 60 x 1.41
2 Pcs

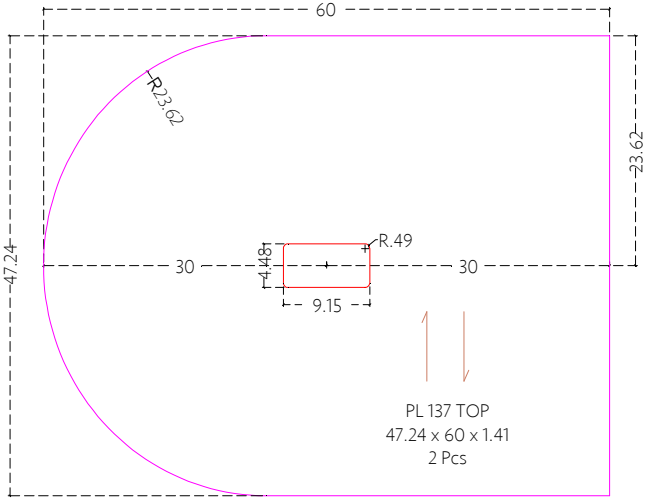

PL 137 TOP
47.24 x 60 x 1.41
2 Pcs

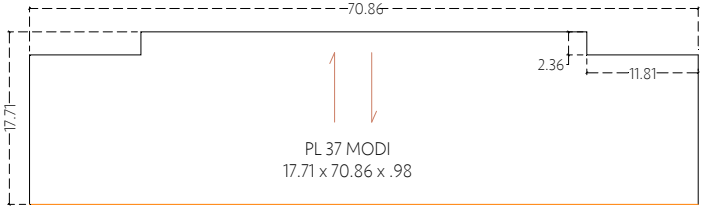

PL 37 MODI
17.71 x 70.86 x .98

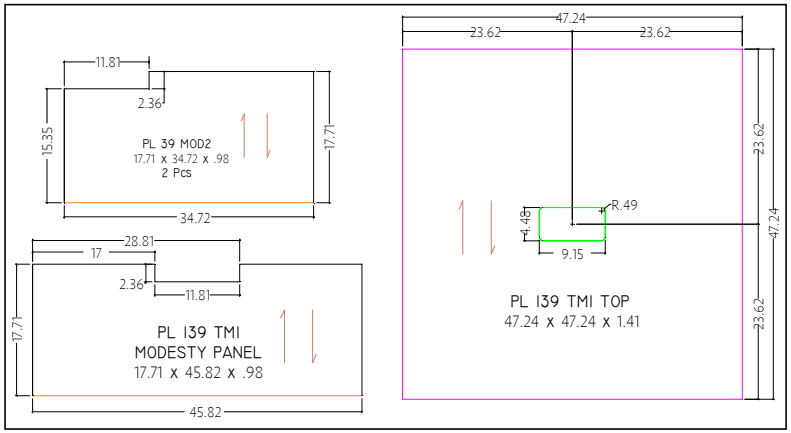

PL 39 MOD2
17.71 x 34.72 x .98
2 Pcs

PL 139 TMI
MODESTY PANEL
17.71 x 45.82 x .98

PL 139 TMI TOP
47.24 x 47.24 x 1.41

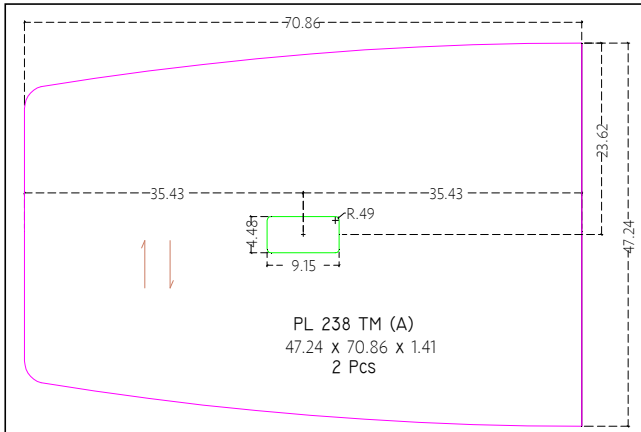

PL 238 TM (A)
47.24 x 70.86 x 1.41
2 Pcs

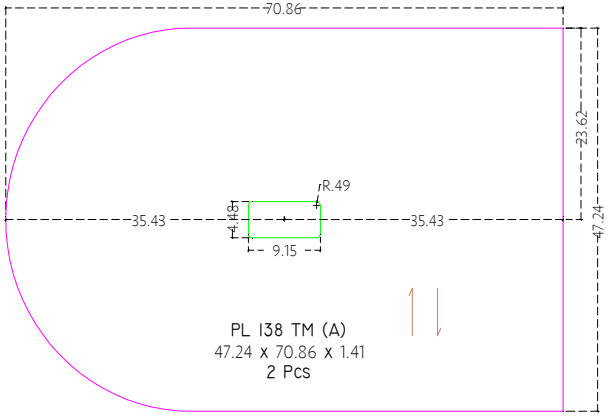

PL 138 TM (A)
47.24 x 70.86 x 1.41
2 Pcs

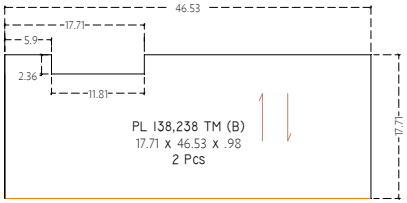

PL 138,238 TM (B)
17.71 x 46.53 x .98
2 Pcs

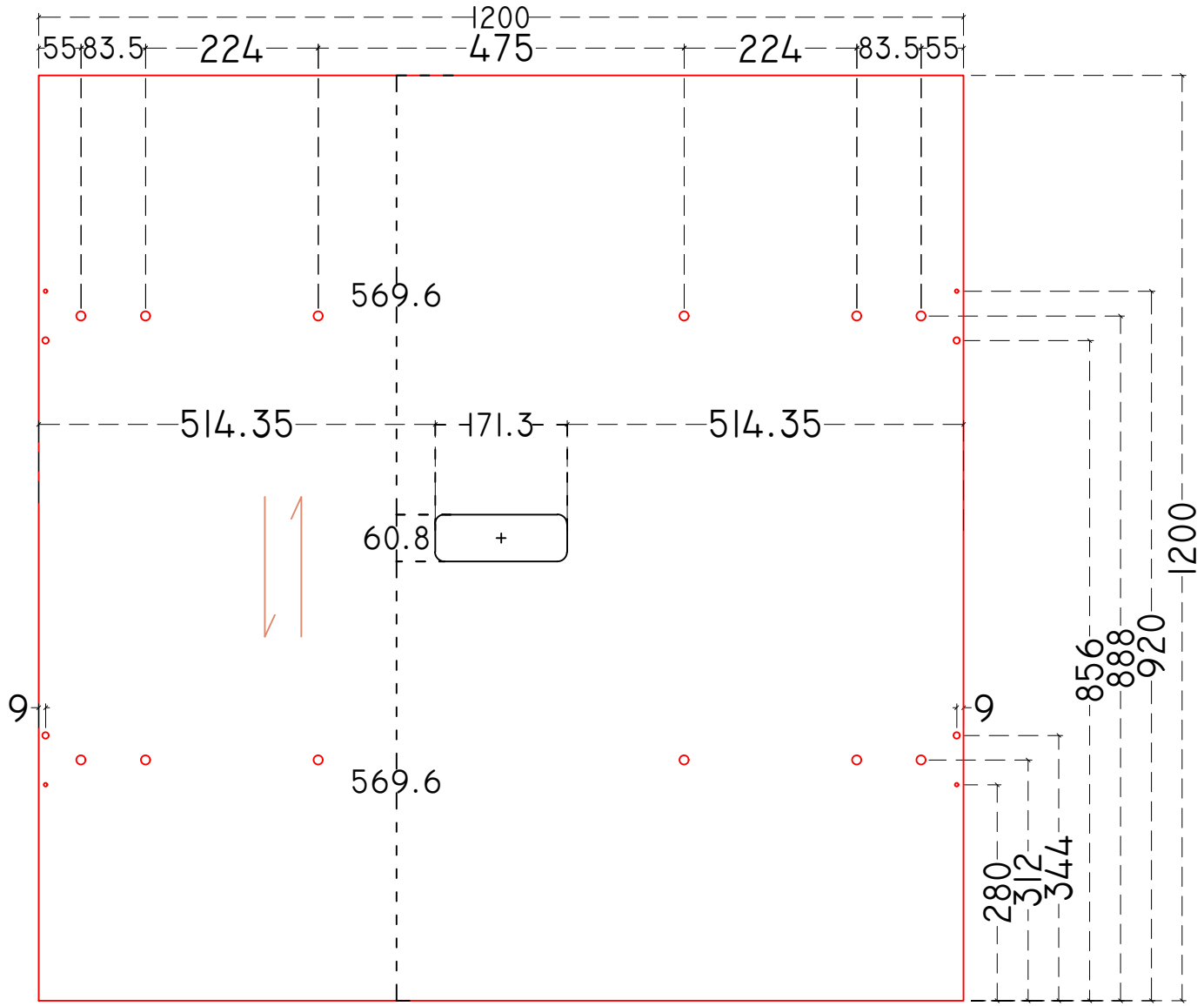

PL639T

L1200 x W1200 x H36MM

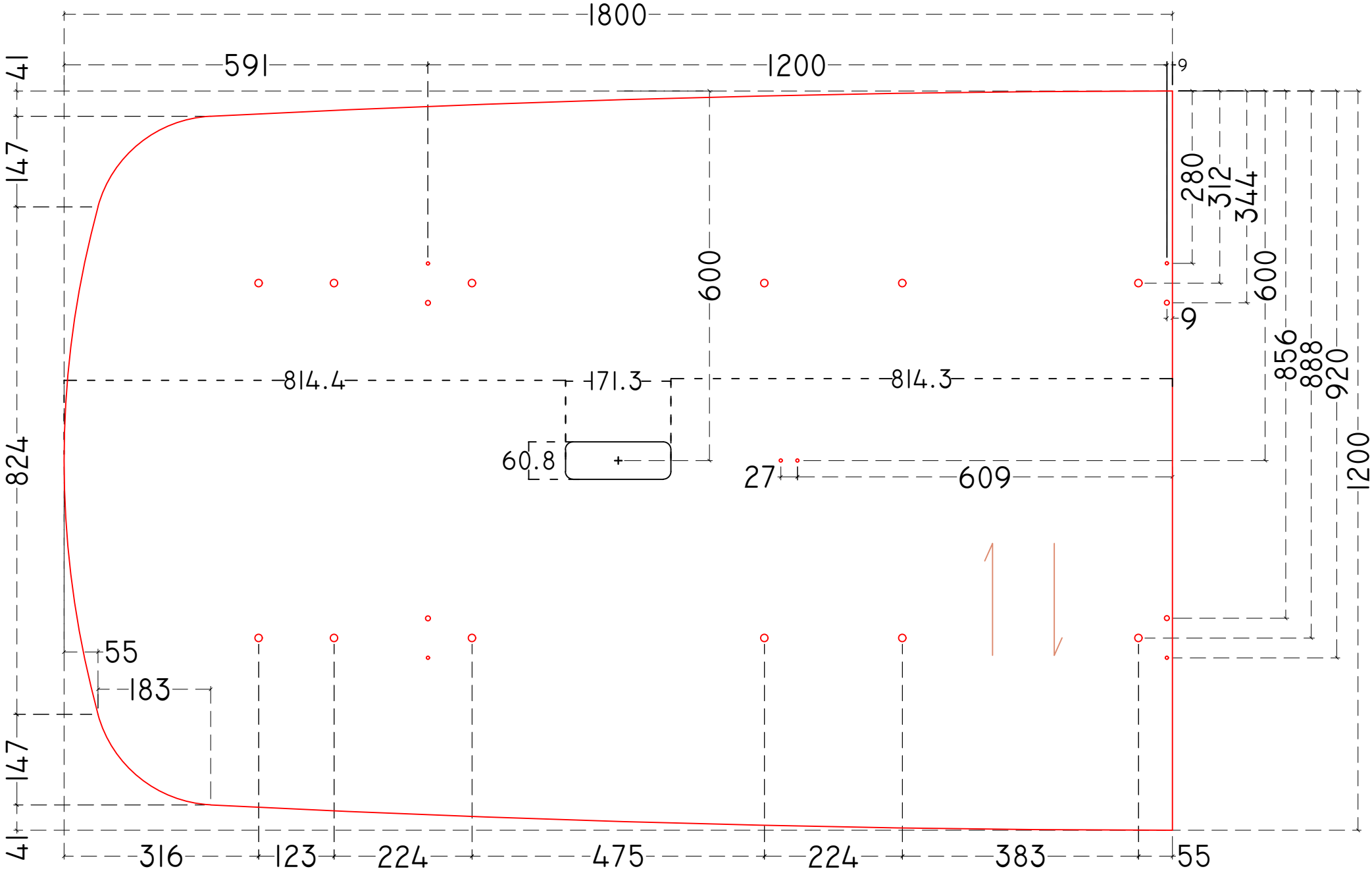

PL638T
TOP PANEL
1200 x 1800 x 36

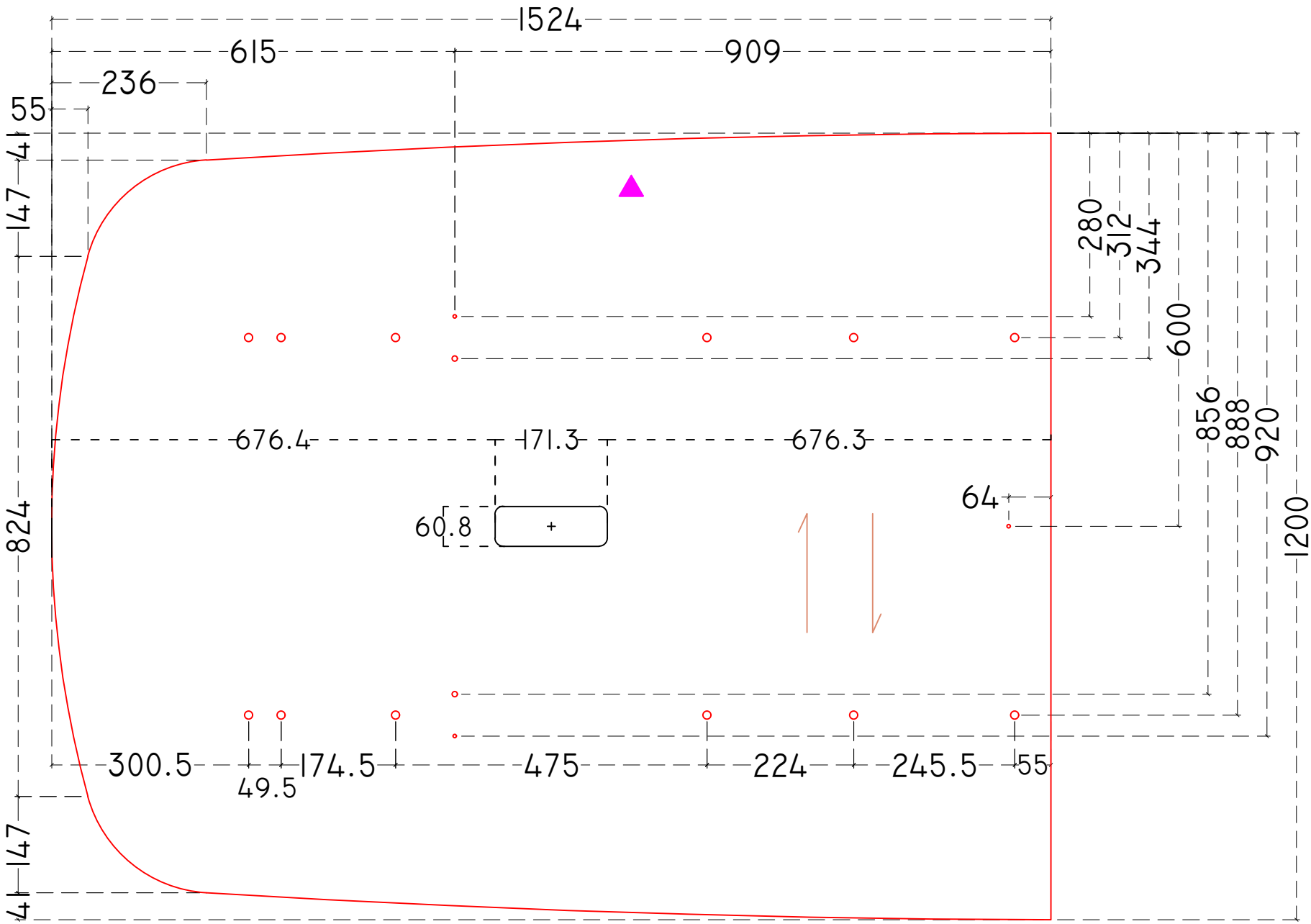

PL637T
TOP PANEL
1200 x 1524 x 36

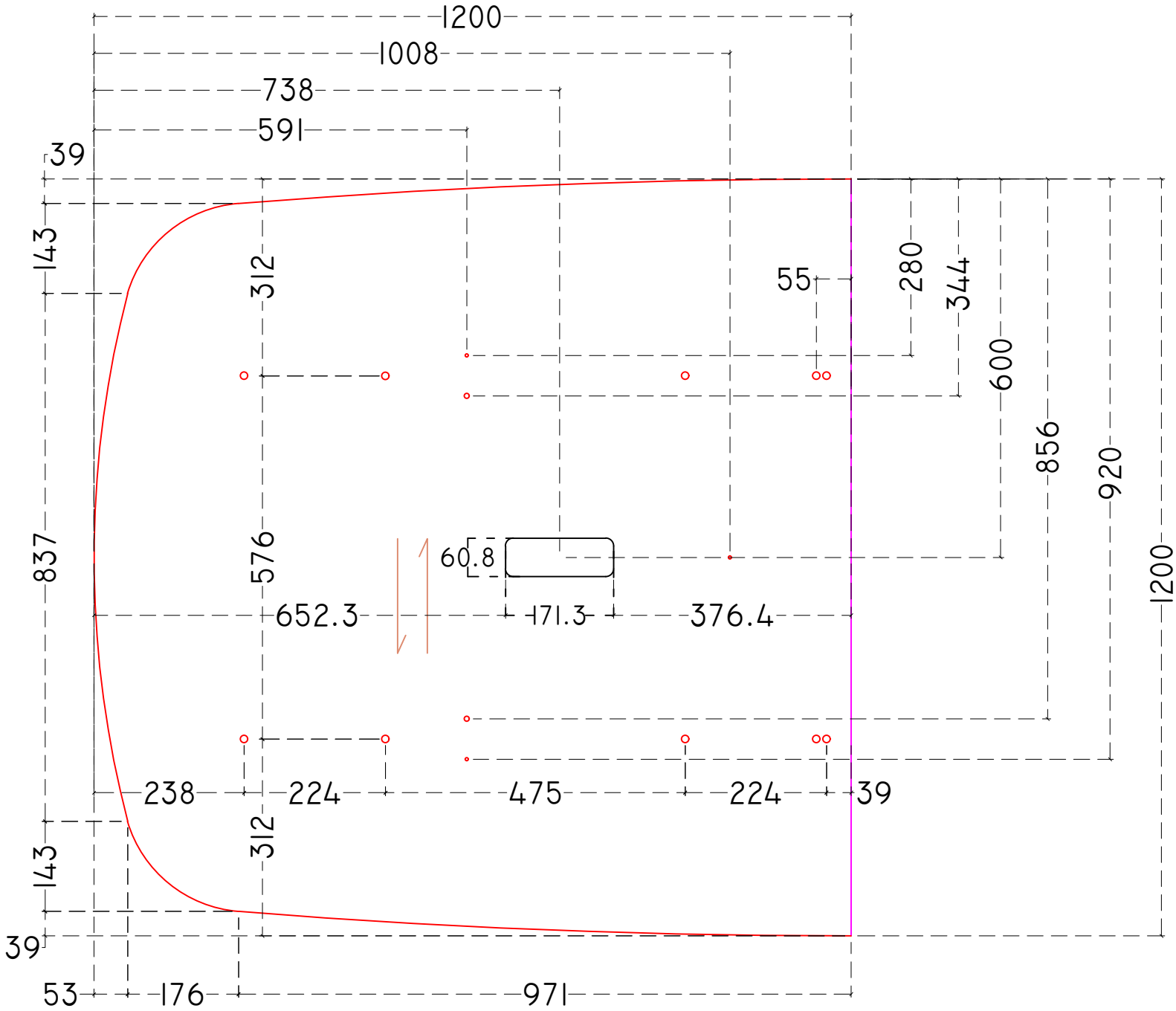

PL636T

TOP PANEL

1200 x 1200 x 36

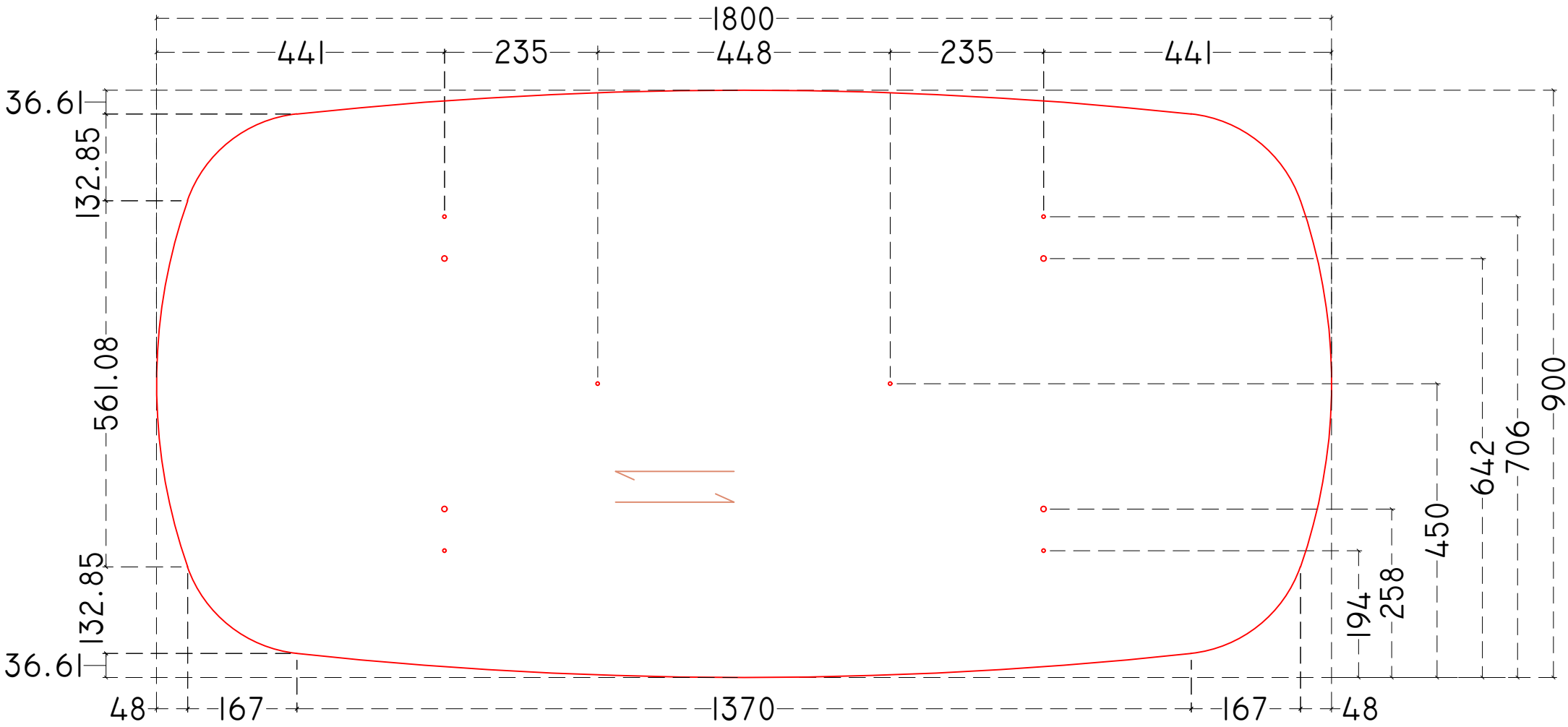

PL635TNG
TOP PANEL
1800 x 900 x 36